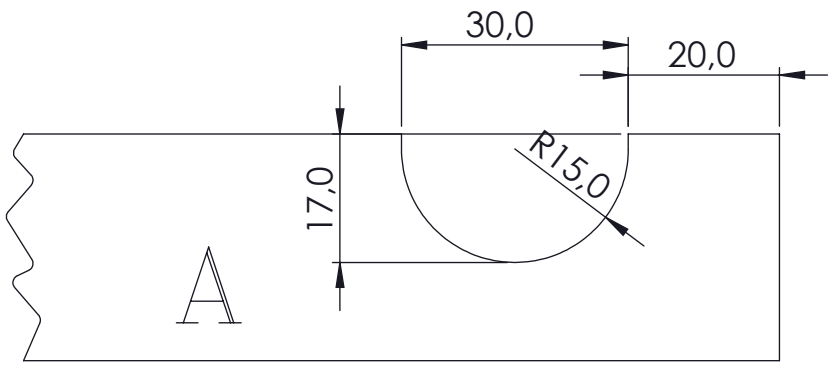
30,0
20,0
R15,0
17,0
A

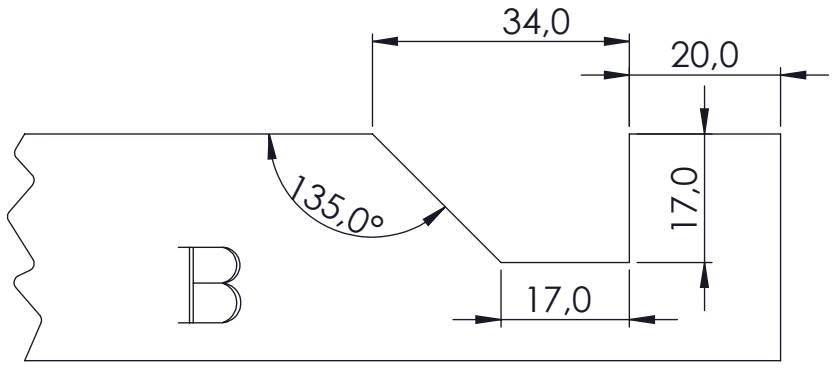
34,0
20,0
135,0°
17,0
17,0
B

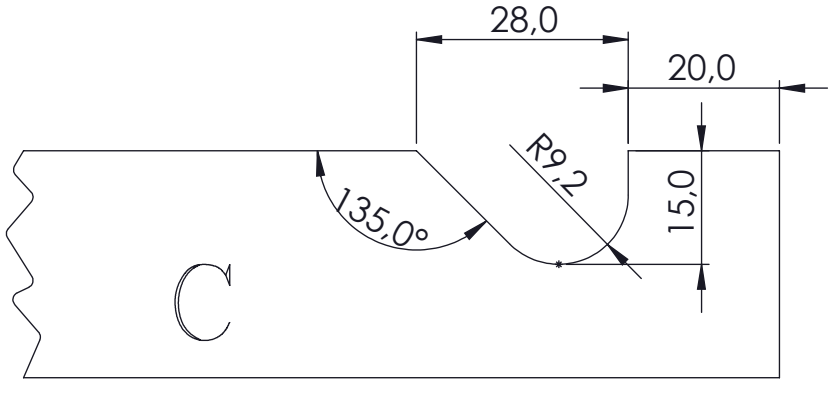
28,0
20,0
R9,2
135,0°
15,0
C

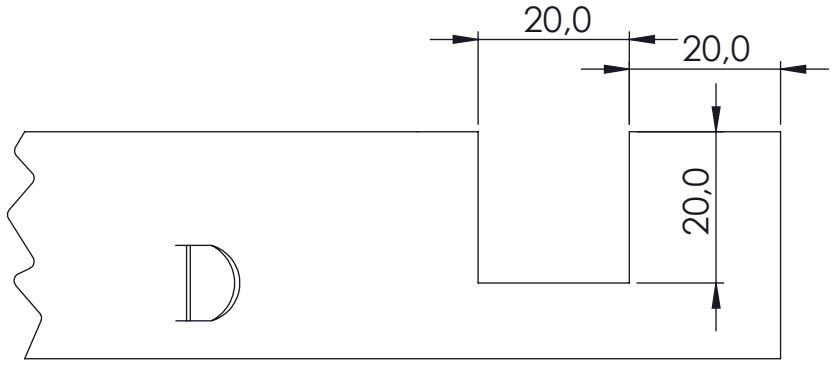
20,0
20,0
20,0
D

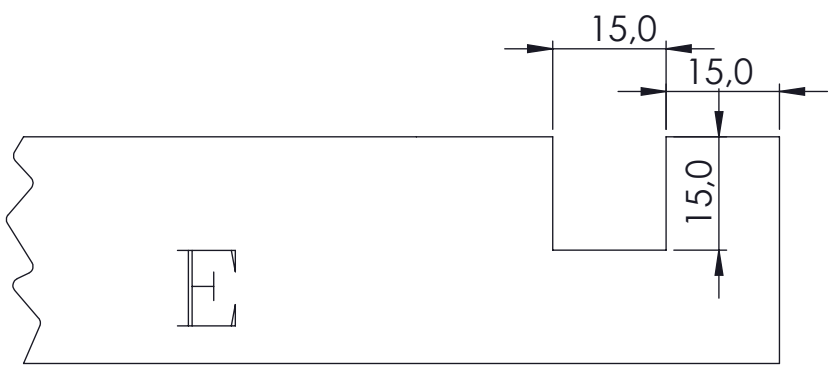
15,0
15,0
15,0
E

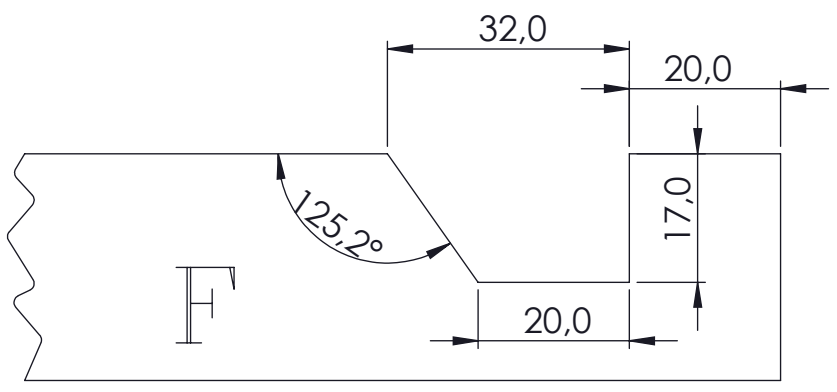
32,0
20,0
125,2°
17,0
20,0
F

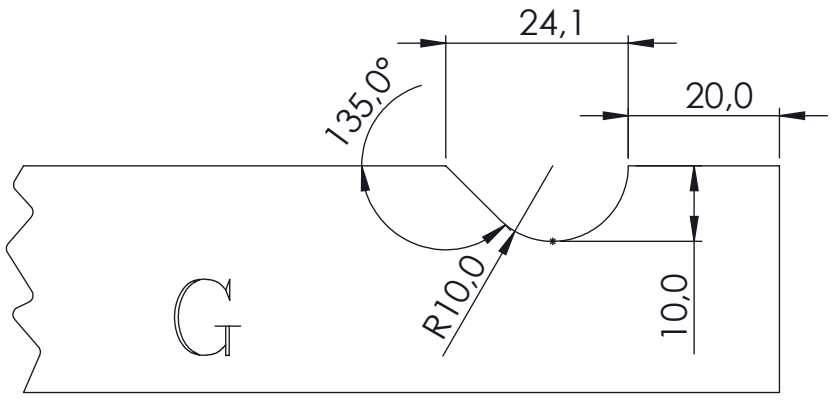
24,1
135,0°
20,0
R10,0
10,0
G

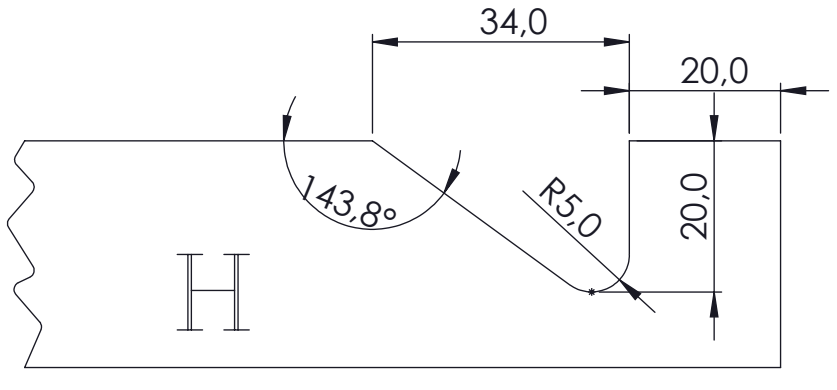
34,0
20,0
143,8°
R5,0
20,0
H